SAFT FIRST

PYRAN® Platinum L

Manufactured by SCHOTT® Technical Glass Solutions

20-180 Minute Premium Laminated Fire Protective Safety Ceramic

PRODUCT ADVANTAGES

- **The first premium-grade fire rated glass ceramic made specifically for architectural applications.**
- Neutral coloration designed to more closely match float glass.
- Advanced manufacturing process eliminates the added cost of surface polishing.
- Environmentally-friendly glass ceramic manufactured free of toxins and hazardous heavy metals.
- Laminated glass ceramic meets the highest human impact safety requirements.
- Readily available through our factory direct *Quick-Ship* program and our nationwide distributor network.
- Insulated, obscure and other custom make-ups available.
- 5 year manufacturer's warranty.

Fire Rating	Application	Max. CV Area	Max. CV Width	Max. CV Height	Stops
20-90 min.*	Sidelites Windows Transoms	3,143 sq. in. (2.03 m²)	75 in. (1.91 m)	75 in. (1.91 m)	1/2 in. (13 mm)
20-90 min.*	Doors (Non-Temp. Rise)	2,736 sq. in. (1.77 m²)	36 in. (0.91 m)	75 in. (1.91 m)	5/8 in. (16 mm)
up to 180 min.	Doors (Temp. Rise)	100 sq. in. (0.06 m²)	12 in. (0.30 m)	33 in. (0.84 m)	5/8 in. (16 mm)

*Please see note under Typical Details for limitations.
Maximum sheet size: Approximately 43 x 77 in. (1.09 x 1.96 m)

UL AND INTERTEK TESTED AND CERTIFIED

PYRAN® Platinum L by SAFTI *FIRST* is listed and labeled by Intertek and Underwriters Laboratories, nationally recognized testing laboratories approved by OSHA. All ceramic products do not meet ASTM E119 or NFPA 251 and should not be used in such applications.

FIRE PROTECTIVE

Contains smoke and flames.
Does not block radiant heat.

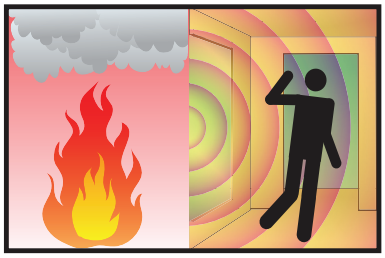

For fire resistive glazing that blocks radiant heat see SuperLite II-XL.

SPECIFICATIONS

Thickness: 3/8 in. (9 mm)

Weight: 4 lbs./sq.ft. (20 kg/m²)

Appearance: Free of amber tint

Fire Rating:
20-180 minutes with hose stream

Impact Safety Rating:
CPSC 16 CFR 1201 Cat. I and II, ANSI Z79.1

3-Part Specifications:
Available at
www.safti.com/specifications

APPROVALS

UL 9, UL 10B, UL 10C, NFPA 80, NFPA 252, NFPA 257, ASTM E2074, ASTM E2010-01, CPSC 16 CFR 1201 Cat. I and II, ANSI Z97.1, ULC CAN4-S104, ULC CAN4-S106.

CERTIFIED cradletocradle SILVER

SAFTI*FIRST*

PYRAN® Platinum L

Manufactured by SCHOTT® Technical Glass Solutions

20-180 Minute Premium Laminated Fire Protective Safety Ceramic

PYRAN® Platinum L by SAFTI *FIRST* is the first environmentally-friendly, fire and safety rated glass ceramic made specifically for architectural applications. This product is free of amber tints that are typical of other ceramics without the added cost of surface polishing.

Project: Lafayette School in San Francisco, CA
Contract Glazier: MAZ Commercial Glass
Products Used: PYRAN® Platinum L in GPX Builders Series Fire Protective Framing

TYPICAL DETAILS

More details available at www.safti.com/details

PYRAN® Platinum L in vision kit and GPX Builders Series Fire Protective Door and Sidelite

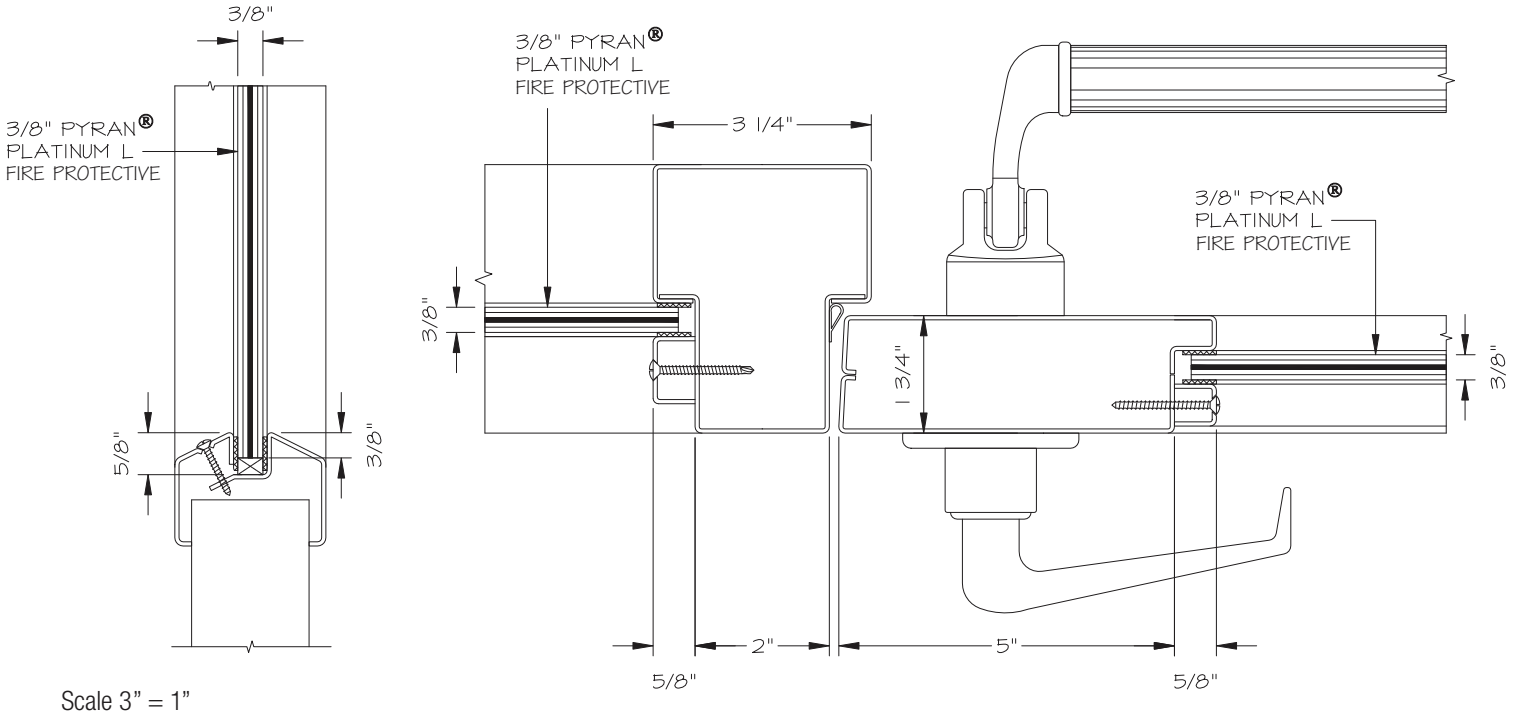

Scale 3" = 1"

* Fire protective glazing is limited to 100 sq. in. in temperature rise doors and up to the maximum size tested in non-temperature rise doors. Fire protective glazing is limited to 25% of the wall area and cannot be used in applications that require ASTM E-119 or NFPA 251.

The information provided herein is for general reference only and is subject to change without notice. Please visit www.safti.com for the most up to date information. © SAFTI *FIRST* January 2017