SuperLite® II-XL 60

60 Minute
Fire Resistive Glazing

PRODUCT ADVANTAGES

FIRE RATED | GREEN | HOSE STREAM | RADIANT HEAT | IMPACT RATED | THERMAL SHOCK | POSITIVE PRESSURE

- **Maximum fire and impact safety with hose stream and full radiant heat protection.**
- Largest tested and approved sizes up to 4,952 in.² (3.19 m²) for door applications in standard 1-3/8 in. (35 mm) profile.
- Fully tested, approved and listed for temperature rise doors, openings and wall applications.
- Tint-free and optically clear. Perfect for property line requirements.
- Available in custom architectural make-ups, such as laminated glass and energy-saving insulated units.
- Can be customized to protect against forced entry, bullets, blast, hurricane and more.
- Standard 5 year limited warranty.
- USA manufactured for fast lead times and competitive pricing.

STARPHIRE ULTRA-CLEAR® GLASS Now available with ***Starphire Ultra-Clear***® glass by Vitro

Large Sizes for Doors, Sidelites, Windows, Transoms and Walls

Fire Rating	Max. CV Area	Max. CV Width	Max. CV Height	Stops
All 60 minute applications	4,952 in.² (3.19 m²)	124 in. (3.15 m)	124 in. (3.15 m)	5/8 in. (16 mm)

1 in. stops recommended (25 mm). See Quality Guidelines for SAFTI *FIRST*® Fire Resistive Glass on the website for more information.

UL AND INTERTEK TESTED AND CERTIFIED

Intertek | CLASSIFIED UL

SuperLite® II-XL is listed and labeled by Intertek and Underwriters Laboratories, nationally recognized testing laboratories approved by OSHA.

APPROVALS

UL 9, UL 10B, UL 10C, UL 263, NFPA 80, NFPA 251, NFPA 252, NFPA 257, ASTM E119, ASTM E152, ASTM E163, ASTM E2074, ASTM E2010-01, CPSC 16 CFR 1201 Cat. II, ANSI Z97.1, ULC CAN4-S101, ULC CAN4-S104, ULC CAN4-S106, NFRC 100, NFRC 200, NFRC 500, ASTM C1629/C1629M, ASTM E695, ASTM D4977.

FIRE RESISTIVE

Contains smoke, flames and blocks the passage of radiant heat.

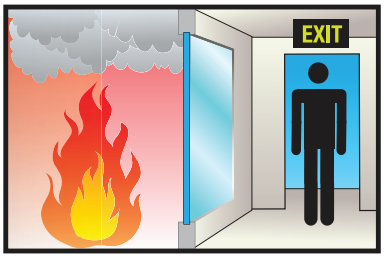

SPECIFICATIONS

Thickness: 1-3/8 in. (35 mm); 2-1/8 in. (54 mm) when insulated with clear Low-E

Weight: 14 lbs./sq.ft. (69 kg/m²) in 1-3/8 in. (35 mm) profile

Sound Rating in GPX® Framing:
STC 43/OITC 39 standard profile;
STC 43/OITC 37 insulated with 1/4" Low-E

Fire Rating: 60 minute with hose stream
Meets ASTM E119 and UL 263

Visible Transmittance: 0.786 with clear standard; 0.877 with clear low-iron

Impact Safety Rating:
CPSC 16 CFR 1201 Cat. I and II & ANSI Z97.1

Hard Body Impact Classification:
ASTM C1629/C1629M Level 3

Soft Body Impact Classification:
ASTM E695 Level 3

Surface Abrasion Resistance:
ASTM D4977 Level 3

GSA® Contract Holder
Contract 47QSWA20D0022

Made in the USA

SuperLite® II-XL 60

60 Minute
Fire Resistive Glazing

1-hour door assembly at the Sustainability and Research Building at UC Merced brings light and transparency, promoting wayfinding.

Project: UC Merced Sustainability and Research Building in Merced, CA
Architect: SOM
Contract Glazier: Webcor
Products Used: SuperLite® II-XL 60 in GPX® Builders Series Temperature Rise Doors and SuperLite® II-XL 60 in GPX® Architectural Series Wall

3-Part Specifications available at www.safti.com/specifications

TYPICAL DETAILS

More details available at www.safti.com/details

SuperLite® II-XL 60 in GPX® Architectural Series Sidelite/Transom and SuperLite® II-XL 60 in GPX® Builders Series Temperature Rise Door

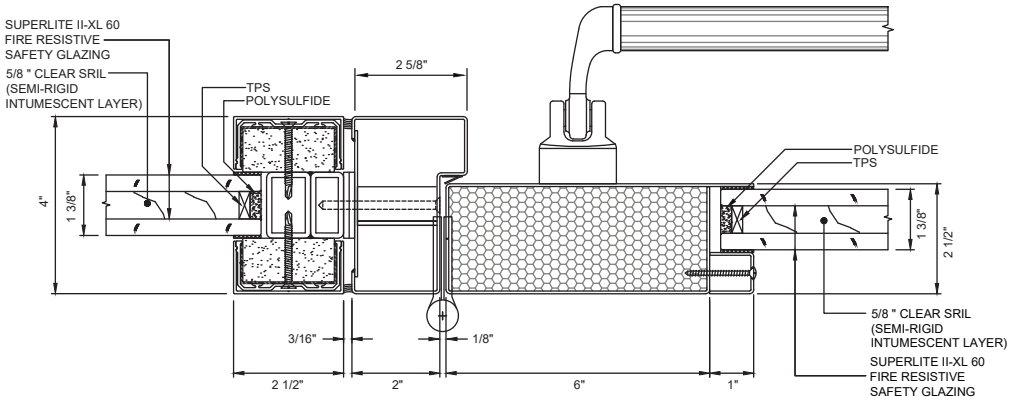

DOOR JAMB AT HINGE DETAIL

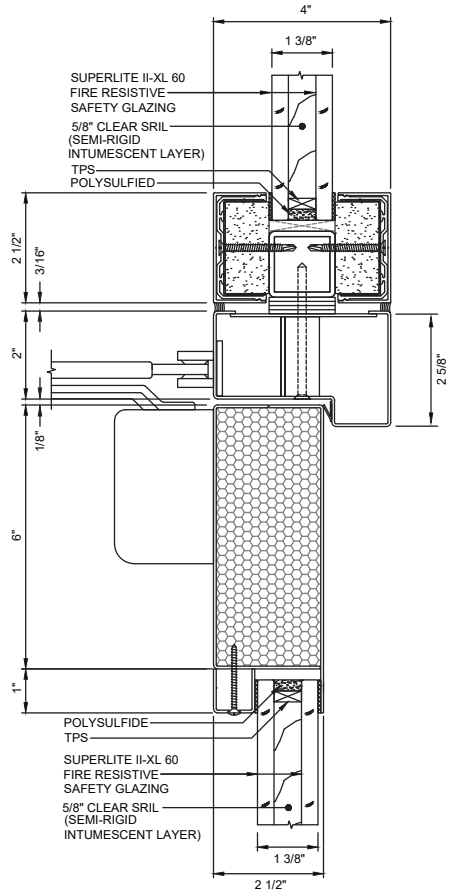

DOOR TOP RAIL DETAIL

Details not to scale.

Starphire Ultra-Clear® is a registered trademark owned by Vitro. The information provided herein is for general reference only. Please visit www.safti.com for the most updated information. © SAFTI *FIRST*® February 2022