90 MINUTE TEMPERATURE RISE DOOR PAIR
WITH 120 MINUTE FIRE RESISTIVE GPX WALL/WINDOW

–EXTERIOR APPLICATION–

For more details, please visit www.safti.com

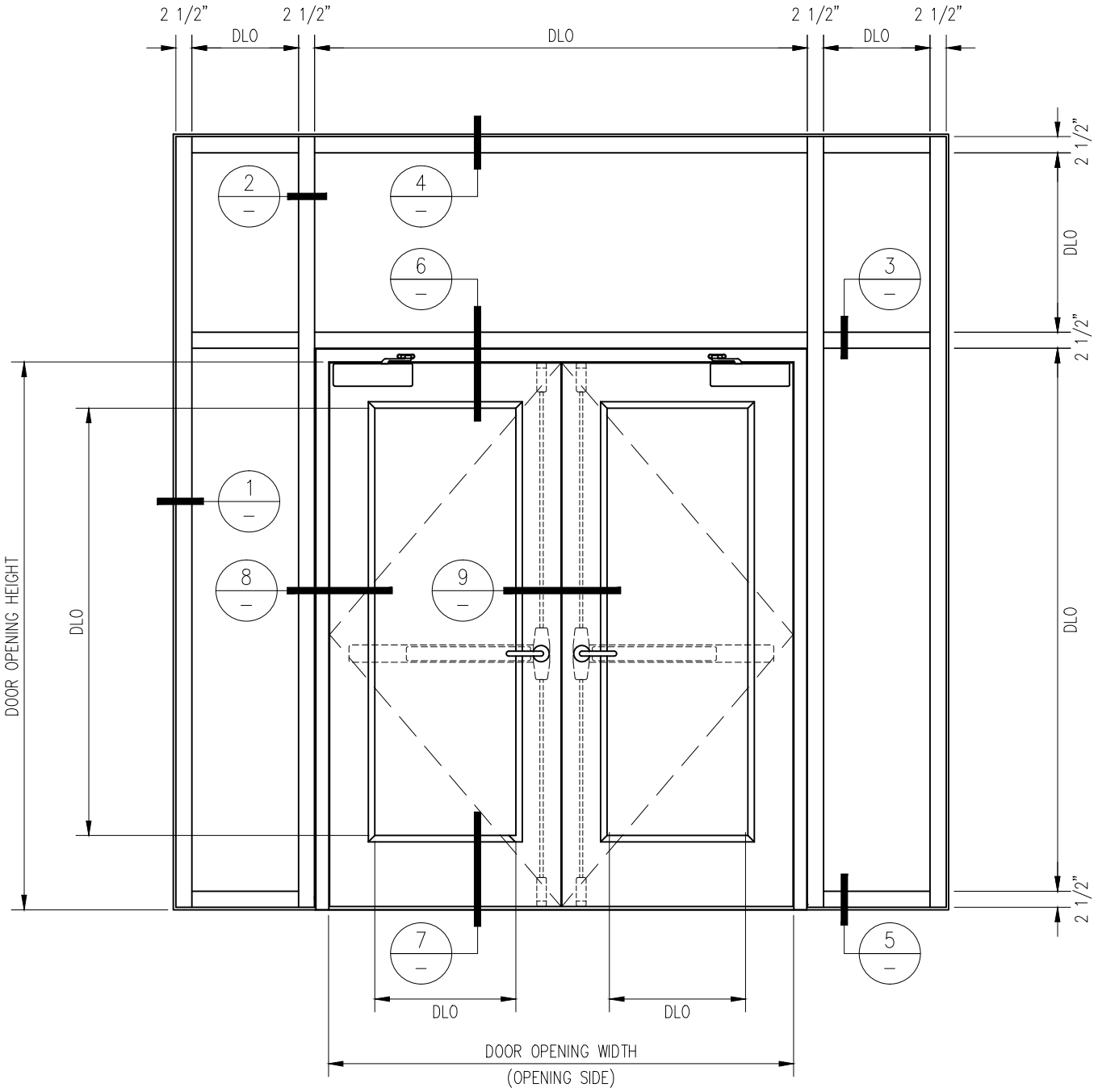

SAFTIFIRST™
FIRE RATED GLAZING SOLUTIONS Since 1982
100 N. HILL DR. SUITE 12
BRISBANE, CA 94005
TEL: (415) 824-4900
FAX: (415) 824-5900

SuperLite™ II-XL
GPX BUILDERS SERIES
TEMPERATURE RISE

DATE:	
DRAWN:	SCALE:

These details are subject to change without notice.

90 MINUTE TEMPERATURE RISE DOOR PAIR
WITH 120 MINUTE FIRE RESISTIVE GPX WALL/WINDOW

–EXTERIOR APPLICATION–

For more details, please visit www.safti.com

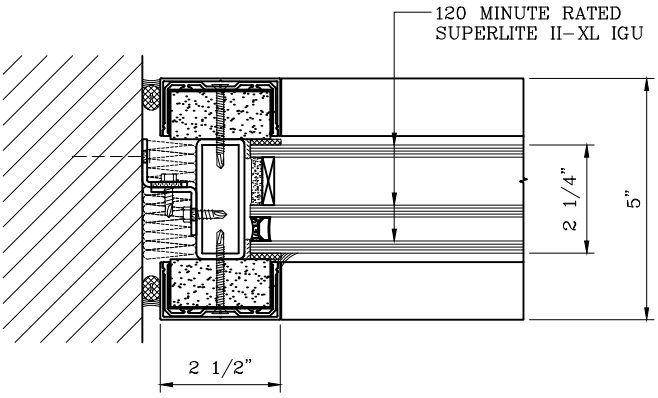

1 / – JAMB DETAIL

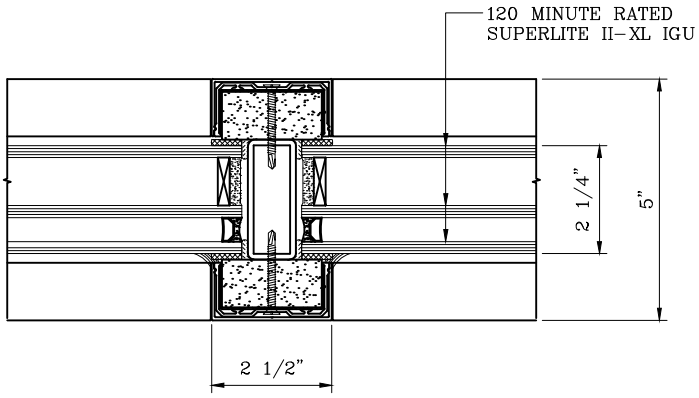

2 / – VERTICAL MULLION DETAIL

SAFTIFIRST™
FIRE RATED GLAZING SOLUTIONS Since 1982
100 N. HILL DR. SUITE 12
BRISBANE, CA 94005
TEL: (415) 824–4900
FAX: (415) 824–5900

SuperLite™ II-XL GPX BUILDERS SERIES TEMPERATURE RISE

DATE:	
DRAWN:	SCALE:

These details are subject to change without notice.

90 MINUTE TEMPERATURE RISE DOOR PAIR
WITH 120 MINUTE FIRE RESISTIVE GPX WALL/WINDOW

–EXTERIOR APPLICATION–

For more details, please visit www.safti.com

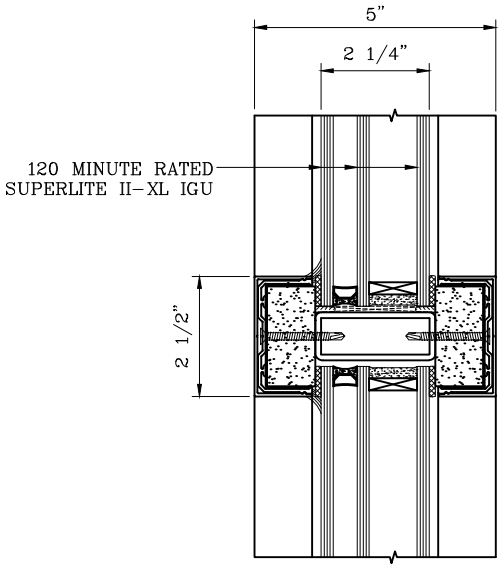

3 – HORIZONTAL MULLION DETAIL

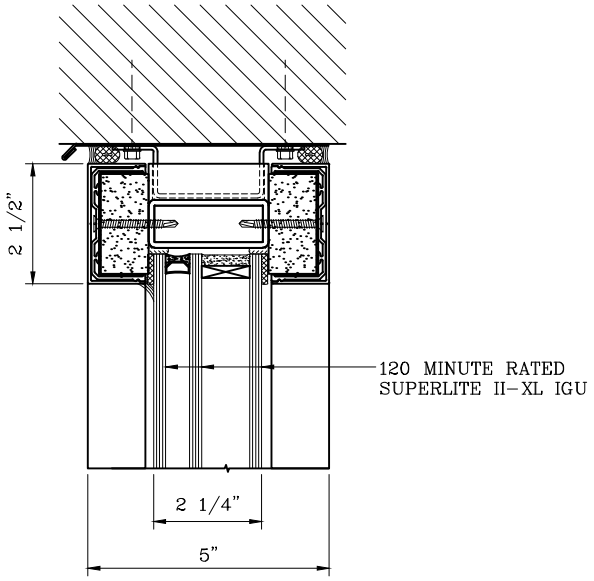

4 – HEAD DETAIL

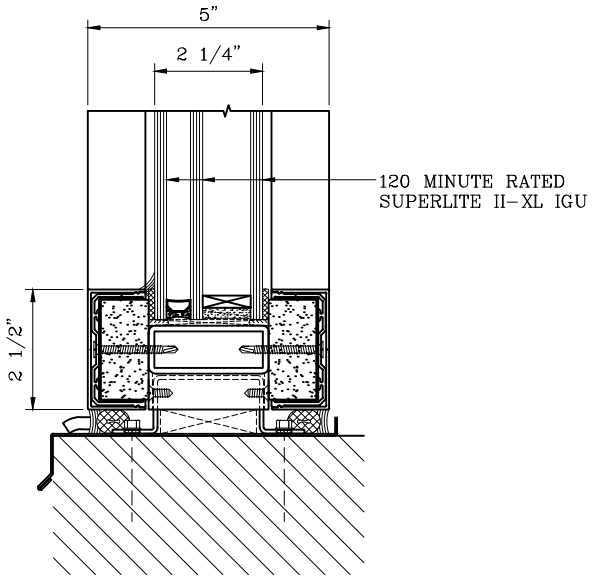

5 – SILL DETAIL

SAFTIFIRST™
FIRE RATED GLAZING SOLUTIONS Since 1982
100 N. HILL DR. SUITE 12
BRISBANE, CA 94005
TEL: (415) 824-4900
FAX: (415) 824-5900

SuperLite™ II-XL
GPX BUILDERS SERIES
TEMPERATURE RISE

DATE:	
DRAWN:	SCALE:

These details are subject to change without notice.

90 MINUTE TEMPERATURE RISE DOOR PAIR
WITH 120 MINUTE FIRE RESISTIVE GPX WALL/WINDOW

–EXTERIOR APPLICATION–

For more details, please visit www.safti.com

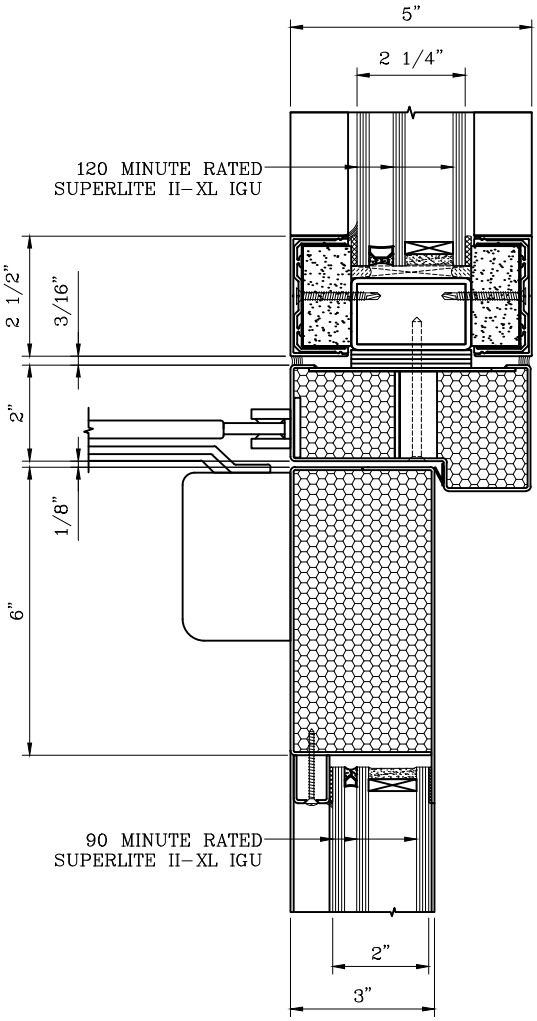

6 DOOR TOP RAIL DETAIL

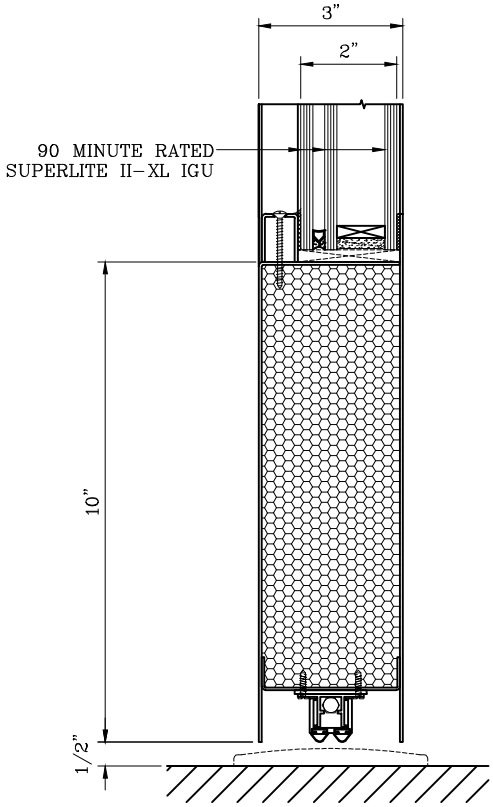

7 DOOR BOTTOM RAIL DETAIL

SAFTIFIRST™
FIRE RATED GLAZING SOLUTIONS Since 1982
100 N. HILL DR. SUITE 12
BRISBANE, CA 94005
TEL: (415) 824–4900
FAX: (415) 824–5900

SuperLite™ II-XL GPX BUILDERS SERIES TEMPERATURE RISE

DATE:	
DRAWN:	SCALE:

These details are subject to change without notice.

90 MINUTE TEMPERATURE RISE DOOR PAIR WITH 120 MINUTE FIRE RESISTIVE GPX WALL/WINDOW

–EXTERIOR APPLICATION–

For more details, please visit www.safti.com

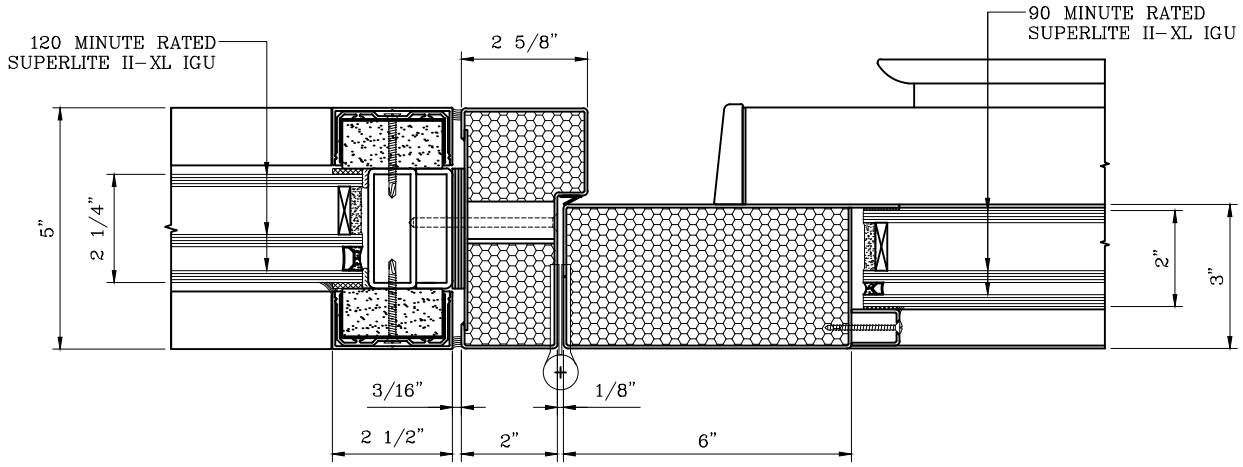

8 – DOOR JAMB at HINGE DETAIL

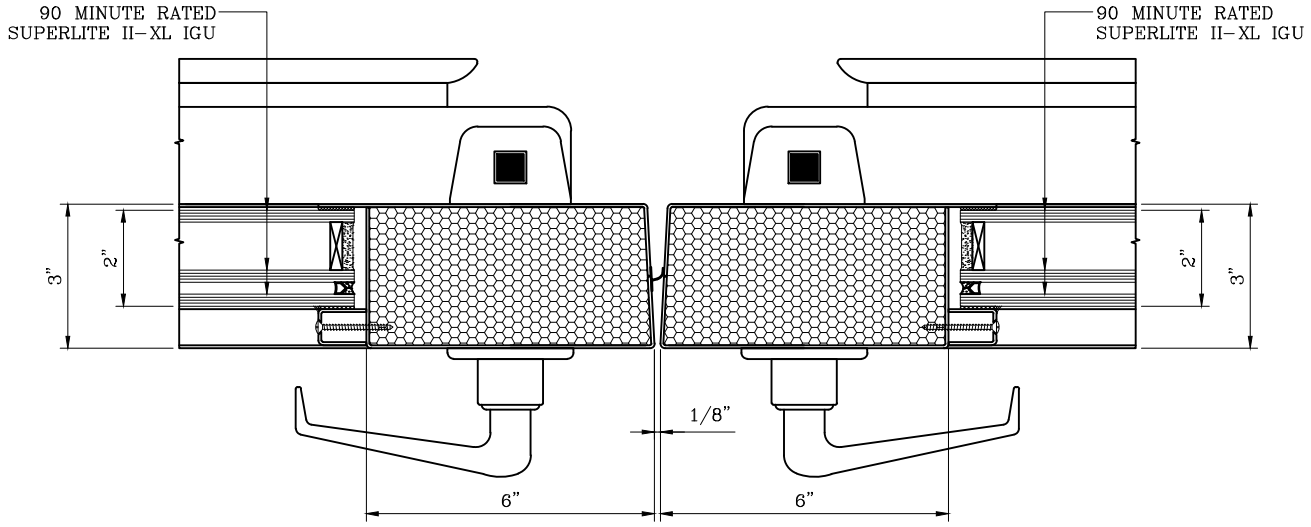

9 – DOOR MEETING STILES DETAIL

SAFTIFIRST™
FIRE RATED GLAZING SOLUTIONS Since 1982
100 N. HILL DR. SUITE 12
BRISBANE, CA 94005
TEL: (415) 824-4900
FAX: (415) 824-5900

SuperLite™ II-XL GPX BUILDERS SERIES TEMPERATURE RISE

DATE:

DRAWN:

SCALE:

These details are subject to change without notice.